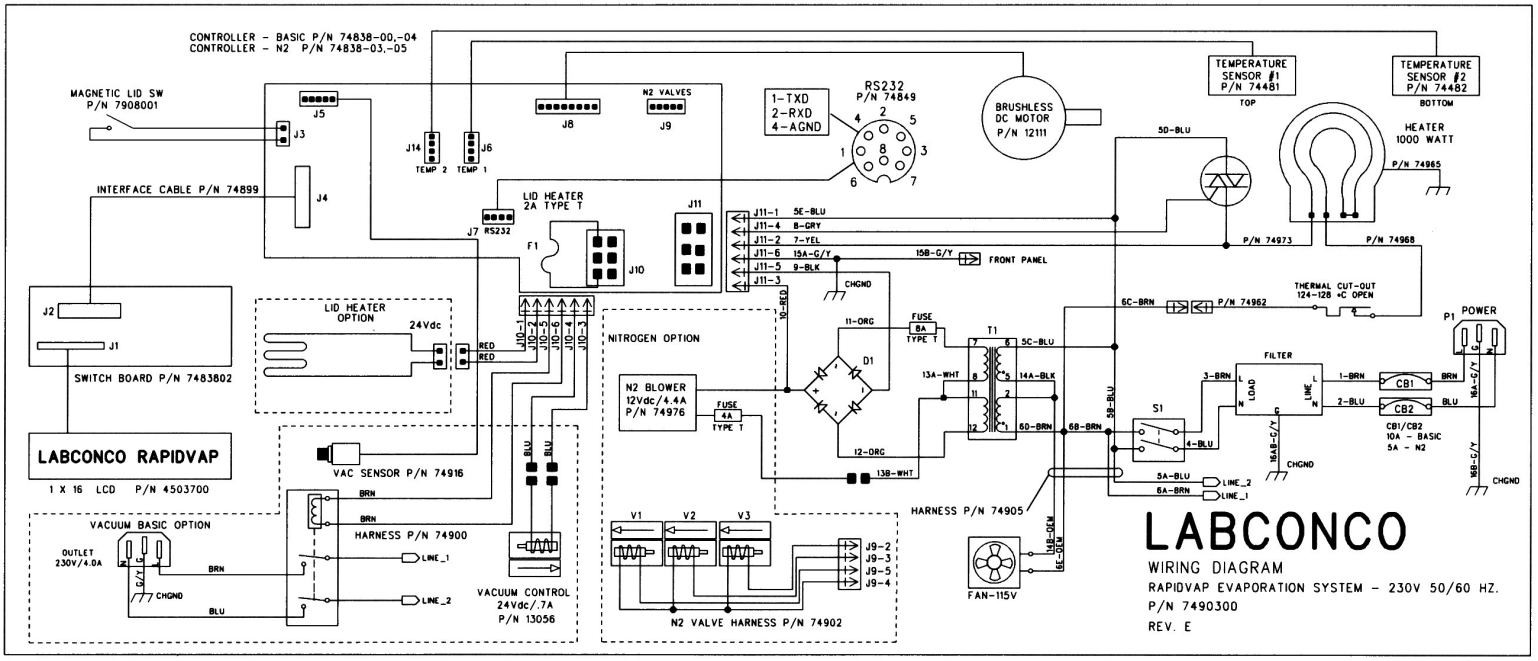
CONTROLLER - BASIC P/N 74838-00,-04
CONTROLLER - N2 P/N 74838-03,-05
MAGNETIC LID SW
P/N 7908001
J5
J3
J8
N2 VALVES
J9
J14
TEMP 2
J6
TEMP 1
1-TXD
2-RXD
4-AGND
RS232
P/N 74849
BRUSHLESS
DC MOTOR
P/N 12111
TEMPERATURE
SENSOR #1
P/N 74481
TOP
TEMPERATURE
SENSOR #2
P/N 74482
BOTTOM
HEATER
1000 WATT
P/N 74965
INTERFACE CABLE P/N 74899
J4
J7 RS232
LID HEATER
2A TYPE T
F1
J10
J11
J11-1 5E-BLU
J11-4 8-GRY
J11-2 7-YEL
J11-6 15A-G/Y
J11-5 9-BLK
J11-3
15B-G/Y
FRONT PANEL
CHGND
5D-BLU
P/N 74973
P/N 74968
THERMAL CUT-OUT
124-128 °C OPEN
6C-BRN
P/N 74962
J2
J1
SWITCH BOARD P/N 7483802
LID HEATER
OPTION
24Vdc
RED
RED
J10-1
J10-2
J10-5
J10-6
J10-4
J10-3
NITROGEN OPTION
N2 BLOWER
12Vdc/4.4A
P/N 74976
FUSE
4A
TYPE T
FUSE
8A
TYPE T
11-ORG
D1
12-ORG
13B-WHT
13A-WHT
T1
5C-BLU
14A-BLK
6D-BRN
6B-BRN
5B-BLU
S1
3-BRN
4-BLU
FILTER
LOAD
LINE
1-BRN
2-BLU
CB1
CB2
CB1/CB2
10A - BASIC
5A - N2
BRN
BLU
16A-G/Y
16B-G/Y
CHGND
16AB-G/Y
5A-BLU
6A-BRN
LINE_2
LINE_1
POWER
P1
LABCONCO RAPIDVAP
1 X 16 LCD P/N 4503700
VAC SENSOR P/N 74916
BLU
BLU
BRN
BRN
HARNESS P/N 74900
LINE_1
LINE_2
VACUUM BASIC OPTION
OUTLET
230V/4.0A
BRN
G/Y
CHGND
BLU
VACUUM CONTROL
24Vdc/.7A
P/N 13056
V1
V2
V3
J9-2
J9-3
J9-5
J9-4
N2 VALVE HARNESS P/N 74902
HARNESS P/N 74905
14B-OGW
6C-OGW
FAN-115V
LABCONCO
WIRING DIAGRAM
RAPIDVAP EVAPORATION SYSTEM - 230V 50/60 HZ.
P/N 7490300
REV. E